CMKT: Concept Map Driven Knowledge Tracing

Yu Lu, Penghe Chen, Yang Pian, and Vincent W. Zheng

***Abstract*—In this article, we advocate for and propose a novel concept map driven knowledge tracing (CMKT) model, which utilizes educational concept map for learner modeling. This article particularly addresses the issue of learner data sparseness caused by the unwillingness to practice and irregular learning behaviors on the learner side. CMKT considers the concept map as a new information source and explicitly exploits its inherent information to help the estimation of the learner's knowledge state. Specifically, the pairwise educational relations in the concept map are formulated as the ordering pairs and are used as mathematical constraints for model construction. The topology information in the concept map is extracted and used as the model input by employing the network embedding techniques. Integrating both educational relation information and topology information in the concept map, CMKT adopts the recurrent neural network to perform knowledge tracing tasks. Comprehensive evaluations conducted on five public educational datasets of four different subjects (more than 8000 learners and their 300 000 records) demonstrate the promise and effectiveness of CMKT: The average area under ROC curve (AUC) and overall prediction accuracy (ACC) achieve 0.82 and 0.75, respectively, and CMKT outperforms all the baselines by at least 12.2% and 9.2% in terms of AUC and ACC.**

***Index Terms*—Concept map, constraint learning, knowledge tracing, learner modeling, network embedding.**

I. Introduction

In the education realm, knowledge tracing (KT) refers to modeling the knowledge states of learners through diagnosing their mastery level quantitatively on the individual pedagogical concept (e.g., "fraction" or "linear equation" in mathematics) [1]. The results of KT can be directly used to estimate a learner's current knowledge strength and weakness, which has been serving a variety of intelligent tutoring systems (ITS) and computer-supported education environments [2]. In addition, KT and its analytic results have been used in today's online learning platforms, including massive open online courses (MOOCs) [3], to provide personalized recommendations of learning resources and modules [4].

Traditionally, KT primarily uses learner's exercise and learning activity data to construct models and estimates a learner's knowledge state accordingly. The rapid development of ITS and MOOCs provides good platforms for collecting these data in a practical and inexpensive manner. However, it also encounters a major challenge: the sparseness of learner's exercise and learning activity data. Specifically, learners tend to use the online educational systems on an irregular time basis and spend less time to practice or review individual concepts as well as the comprehensive assessment [5]. For each individual learner, it is likely that only a small set of concepts in the target subject or course are practiced (i.e., by solving quiz questions) or reviewed (i.e., by browsing tutorial videos or interacting with tutors). As a result, such learners' mastery information most likely remains unknown on a large portion of concepts, which makes KT models suffer from poor performance and be restricted in other applications, including learner academic performance prediction [6], question difficulty estimation [7], and learning path adaptation [8].

However, it is impractical and unfair to impose any strict learning or exercise routines on the learner side for collecting necessary and adequate KT information. Other strategies for handling data spareness, such as data augmentation [9] and transfer learning [10], are also difficult to be applied in KT due to the complexity of the human's cognitive process in the knowledge domain. Thus, our insight into solving this data sparseness problem hinges upon the information from the knowledge domain itself. Specifically, we propose and advocate the use of a *concept map* [11] by fully exploiting its inherent information to help the KT model construction. Briefly speaking, a concept map refers to a graphic representation of pedagogical concepts that illustrate different educational relations between concepts through linking connections. The well-established knowledge space theory [12] in education reveals a natural dependence between pedagogical concepts in the objective domain knowledge and subjective learner cognitive process. In accordance with the knowledge space theory, human's learning process modeling could leverage the information derived from the concept map. Fig. 1 illustrates a simplified concept map that consists of six concepts (i.e., from C1 to C6) with the prerequisite relations. Introducing concept map information into knowledge state estimation provides a data source for KT model construction and helps to mitigate the data sparseness. In the education realm, particularly for K-12 education, concept maps for most subjects and courses have been constructed by domain experts or experienced teachers, which can be directly used for either teaching or research purposes.

Manuscript received 9 March 2020; revised 8 June 2022 and 29 July 2022; accepted 1 August 2022. Date of publication 4 August 2022; date of current version 16 September 2022. This work was supported in part by the National Natural Science Foundation of China under Grants 62077006 and 62177009 and in part by the Fundamental Research Funds for the Central Universities. *(Corresponding author: Penghe Chen.)*

Yu Lu and Penghe Chen are with the Advanced Innovation Center for Future Education, School of Educational Technology, Faculty of Education, Beijing Normal University, Beijing 100875, China (e-mail: luyu@bnu.edu.cn; chenpenghe@bnu.edu.cn).

Yang Pian is with the School of Educational Technology, Faculty of Education, Beijing Normal University, Beijing 100875, China (e-mail: bianyang@mail.bnu.edu.cn).

Vincent W. Zheng is with Advanced Digital Sciences Center, Singapore 138602 (e-mail: vincent.zheng@adsc.com.sg).

Digital Object Identifier 10.1109/TLT.2022.3196355

1939-1382 © 2022 IEEE. Personal use is permitted, but republication/redistribution requires IEEE permission.
See https://www.ieee.org/publications/rights/index.html for more information.

Authorized licensed use limited to: HUNAN UNIVERSITY. Downloaded on October 18,2022 at 08:41:05 UTC from IEEE Xplore. Restrictions apply.

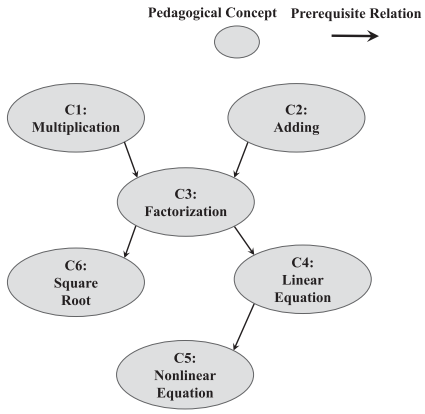

Fig. 1. Simplified concept map for math subject.

In general, two types of information from the concept map can aid the knowledge state estimation and be used by KT models: 1) educational relation information and 2) topology information. The educational relations in concept maps primarily specify the implicit but educationally significant dependencies between pedagogical concepts, which are commonly used to optimize the learning and teaching processes. Take one type of educational relation called prerequisite relation as an example. Given some concepts serve as the prerequisites of another concept (e.g., "adding" and "multiplication" are the prerequisites of "factorization" in math), if a learner has mastered the latter concept (i.e., "factorization"), it can be inferred that the learner likely has mastered its prerequisite ones (i.e., "adding" and "multiplication"). In addition to the prerequisite relation, many other relation types, such as inclusion, causal, and progressive relations, also appear in different concept maps. On the other hand, the topology information mainly refers to the physical structure of the concept map, which indicates how each concept is linked with others and how it is positioned in the entire map structure. For example, as shown in Fig. 1, given a concept that occupies a central position in a concept map (e.g., "adding" and "multiplication" serve as the prerequisites for the concept "factorization," and "factorization" serves as the prerequisites for concepts "linear equation" and "square root"), this concept (e.g., "factorization") would be more critical and important than other concepts that are located at the map edges. Both the educational relation information and the topology information from a concept map can be integrated into KT models for better knowledge state estimation.

This article addresses these issues by introducing concept map information into the KT model design. In particular, we design a novel KT model that explicitly integrates the educational relation information and the topology information derived from a concept map. There are several critical technical challenges in building the desired KT model. For example, how to properly formulate the qualitative pairwise educational relations as quantitative mathematical form and then integrate with the KT model is not straightforward. Also, a concept map naturally forms a directed acyclic graph (DAG), which makes the common network embedding approaches targeting generic graphs unsuitable [13]. Therefore, it is not a trivial task to effectively extract the topology information from a concept map and integrate it with the KT model. To solve such challenges, we consider converting the pairwise educational relations to the specific mathematical constraints to regularize the learner state estimation. We also explore the new embedding method to learn the topology information of a concept map, which can be used as an additional input for the new KT model.

Therefore, this article principally makes the following key contributions.

1) *New KT Model Design:* To alleviate the issue of learner data sparseness and better modeling learners, we propose a new KT model by leveraging on the inherent information from a concept map.
2) *Educational Relation Modeling:* To properly use the educational relations from a concept map, we model its pairwise relations, typically the prerequisite ones, as the ordering pairs, and then use them as mathematical constraints for the new KT model construction.
3) *Topology Information Embedding:* To directly use the topology information from a concept map, we employ network embedding techniques to extract the desired information. The embedding results serve as the new input for the proposed KT model.
4) *Multidatasets and Comprehensive Evaluation:* Using five public educational datasets of four subjects (more than 8000 learners and their 300 000 records), we conduct comprehensive experiments to evaluate the proposed model, and the results show that the new KT model outperforms all the baselines by at least 12.2% and 9.2% in terms of average area under ROC curve (AUC) and overall prediction accuracy (ACC), respectively.

While the proposed new model is novel and effective, we believe that the key impact of this article is to highlight a broader possibility of learner modeling using the domain knowledge and its inherent information, and eventually enables learners and their learning process to be better modeled, analyzed, and predicted.

The remained of this article is organized as follows. Section II describes the basics of KT and how it works. Section III formulates the problem and defines the important mathematical notations. Section IV presents the proposed KT model. We show the evaluation results in Section V. The discussion and the related work are given in Sections VI and VII, respectively. Finally, we conclude in Section VIII.

II. KT and Learner Model

KT mainly aims to estimate the knowledge state of individual learners. Existing KT models often treat the knowledge state on a specific concept or skill as a latent variable and attempt to estimate the mastery probability based on the observed consecutive exercise performance collected from learners. We take the established Bayesian KT (BKT) [1] as an illustrative example. Given a number of questions on the same learning unit (either concept or skill) and a learner's exercise performance on such questions (either correctly answer it or

Authorized licensed use limited to: HUNAN UNIVERSITY. Downloaded on October 18,2022 at 08:41:05 UTC from IEEE Xplore. Restrictions apply.

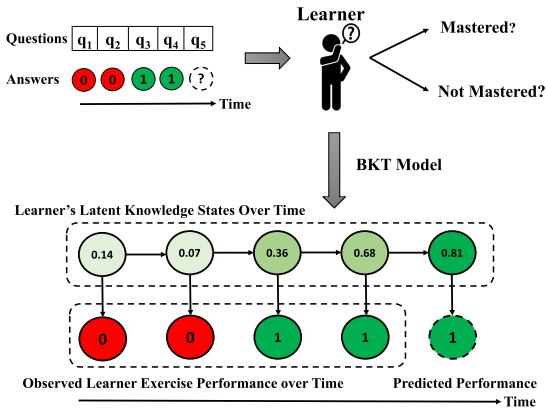

Fig. 2. Simplified illustration of KT.

not) over time, the BKT model aims to timely estimate whether the learner has mastered that learning unit. Specifically, the BKT model assumes a latent binary variable as a learner's knowledge state, namely *mastery* and *not mastery*, and given a learner's exercise results on a sequence of questions, her mastery probability of the learning unit would be timely updated. In practice, the BKT model usually computes the posterior probabilities using Bayes' rule. Furthermore, the observed learner's exercise results are conditional on the latent knowledge state, and thus, the built BKT model could be used to make prediction on learner's future performance and design intervention (or recommendation) strategies for learners.

Fig. 2 illustrates how a BKT model works through a simplified example. Given a learner that wrongly answers the first two questions and then correctly answers the subsequent two questions on the same learning unit, the BKT model would first decrease the mastery probability of her knowledge state (i.e., from 0.14 to 0.07) and then gradually increase the mastery probability considering the following two correct answers. Finally, the model could also predict that the learner will correctly answer the fifth question with a high mastery probability on that concept (i.e., 0.81). In addition to the traditional BKT models, researchers recently attempt to employ the deep learning models to solve the KT problem with deep KT (DKT) models [14], where the recurrent neural network (RNN) is trained for modeling learner's latent knowledge state with the sequential learning exercise data.

III. Problem Formulation

Briefly speaking, the KT problem concerns three main entities: 1) learner, 2) question, and 3) concept. In this article, we denote a set of learners as $\mathcal{U}$, a set of questions for exercise as $\mathcal{Q}$, and a set of concepts as $\mathcal{C}$. In addition, we denote the result of learner $u_i \in \mathcal{U}$ answering a question at time t as $a_{i,t} \in \{0, 1\}$, where $a_{i,t} = 1$ if learner u_i answers correctly; otherwise $a_{i,t} = 0$. Subsequently, we have the following definitions.

Definition 1: An *exercise sequence* $\mathbf{s}_i$ for learner u_i is a sequence of question–answer pairs $\mathbf{s}_i = \{(q_{\pi(i,t)}, a_{i,t}) | t = 1, \ldots, N_i\}$, where $N_i > 0$ is the sequence length, and $\pi(i, t)$ returns the question ID that learner u_i answers at time t.

TABLE I
List of Notations in This Work

Variable	Description
$\mathcal{U}$	a set of learners
$\mathcal{Q}$	a set of questions
$\mathcal{C}$	a set of pedagogical concepts
$\mathcal{G}$	a concept map
$\mathcal{E}$	a set of educational relations
$\mathcal{A}_k$	the set of prerequisites of concept c_k
u_i	the learner i
q_j	the question j
c_k	the concept k
$\pi(i, t)$	the ID of the question answered by learner u_i at time t
$\mathbf{O}_{j,k}$	the binary variable of whether question q_j has concept c_k
$a_{i,t}$	the binary variable indicating whether u_i answers $q_{\pi(i,t)}$ correctly
$\mathbf{s}_i$	an exercise sequence of learner u_i
$\mathbf{q}_j$	a one-hot representation of question q_j
$\mathbf{c}_k$	a one-hot representation of concept c_k
$\mathbf{e}_k$	an embedding vector of concept c_k
$\mathbf{m}_k$	hidden input vector of DAG-GRU unit for concept c_k
$\mathbf{x}_{i,t}$	the model input vector
$\mathbf{y}_{i,t}$	knowledge state of learner u_i at time t

Definition 2: A *question-concept matrix* $\mathbf{O} \in \{0, 1\}^{|\mathcal{Q}| \times |\mathcal{C}|}$ is a binary matrix, where $\mathbf{O}_{j,k} = 1$ if question $q_j \in \mathcal{Q}$ contains concept $c_k \in \mathcal{C}$, and $\mathbf{O}_{j,k} = 0$ otherwise.

Definition 3: A *concept map* $\mathcal{G} = (\mathcal{C}, \mathcal{E})$ is a graphic representation of pedagogical concepts and their educational relations, where $\mathcal{C}$ is the set of nodes in $\mathcal{G}$ denoting the pedagogical concepts, and $\mathcal{E}$ is the set of edges denoting the educational relations between the concepts.

With the above definitions, the *input* for the KT problem can be simply summarized as follows:

1) each learner's *exercise sequence* $\mathbf{s}_i$;
2) a *question-concept matrix* $\mathbf{O}$;
3) a *concept map* $\mathcal{G}$.

For the KT problem *output*, we aim to learn: the knowledge state of learner u_i at time t, denoted as $\mathbf{y}_{i,t}$.

In most cases, the exercise sequence data $\mathbf{s}_i$ can be obtained from ITSs or online education platforms. The question-concept matrix and concept map, including those used in this article, are commonly constructed and validated by experienced teachers and domain experts. In addition, a list of important notations used in this work is summarized in Table I for easier checking.

IV. CMKT Model

A. Model Overview

As shown in Fig. 3, the proposed CMKT model adopts the gated recurrent unit (GRU) [15] to conduct the KT task. Similar to other KT models (e.g., the BKT and DKT model), this model takes learner's sequential exercise information as its major input. However, the CMKT model utilizes two types of information, namely the educational relations and the topology information, which are explicitly derived from the concept map. Specifically, the educational relations are formulated as pairwise ordering pairs and subsequently used as mathematical constraints for the CMKT model. On the other hand, the topology information serves as a new model input by performing the network embedding technique (i.e., the "concept embedding" steps are shown in Fig. 3) on the concept map. We elaborate the proposed CMKT model and its key design parts in the following sections.

Authorized licensed use limited to: HUNAN UNIVERSITY. Downloaded on October 18,2022 at 08:41:05 UTC from IEEE Xplore. Restrictions apply.

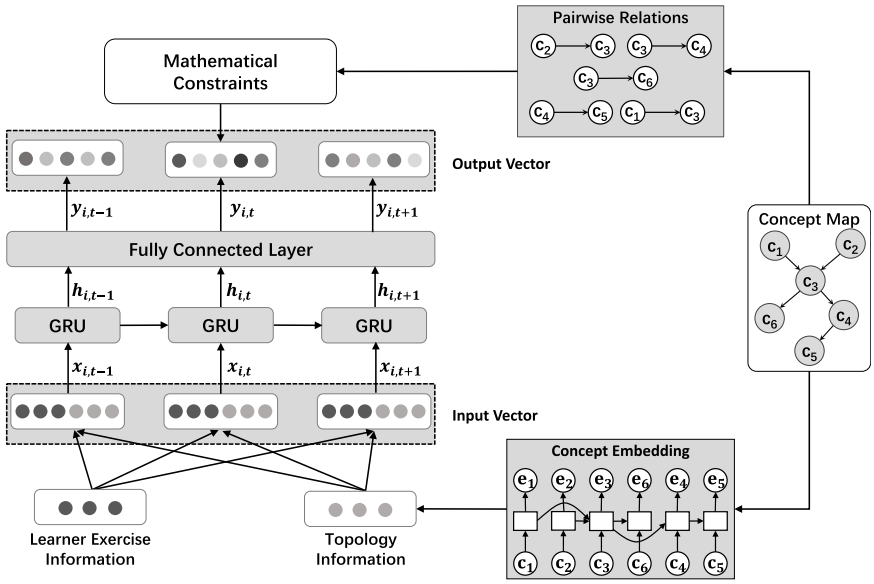

Fig. 3. Block diagram of CMKT model.

B. Modeling Educational Relation

In this article, we take the prerequisite relation among different educational relations as an exemplary one, as it is one of the most implicit but useful relations for education. Many other educational relations, such as inclusion and progressive relations, can be modeled using a similar strategy proposed in this article. According to Bloom's mastery learning theory [16], learners are suggested to master the prerequisite concepts at a certain level before proceeding to the subsequent ones. Thus, the prerequisite relation and the corresponding pairwise concepts commonly exist and serve as the essential part in the concept map.

Considering Bloom's mastery learning theory and the property of prerequisite relation, given concept c_k is the prerequisite of another concept $c_{k'}$, we have two requirements as follows.

R_1: If learner u_i has mastered $c_{k'}$ at time t, then most likely she also masters c_k. We then formalize it as $(y_{i,t,k'} = 1) \Rightarrow (y_{i,t,k} = 1)$, where "$\Rightarrow$" is the logic symbol of *implication*.

R_2: If learner u_i does not master c_k at time t, then most likely she does not master $c_{k'}$ either. We then formalize it as $(y_{i,t,k} = 0) \Rightarrow (y_{i,t,k'} = 0)$, where "$\Rightarrow$" is the logic symbol of *implication* as well.

Given the above two requirements R_1 and R_2, several possible choices exist to model the prerequisite relation while none are feasible for the target CMKT model.

1) *Modeled as logic relation*. Both Markov Logic Network [17] and Probabilistic Soft Logic [18] require formulating the entire problem as logic reasoning, which is nearly an impossible task for KT concerning complex learner's learning behaviors and psychological factors.
2) *Modeled as Boolean function*. Both constraint-driven learning [19] and posterior regularization [20] can be adopted to model a prerequisite constraint as a Boolean function that indicates whether R_1 and R_2 are satisfied. For example, given a threshold ϵ, let $y_{i,t,k} = 1$ if its probability $P(y_{i,t,k} = 1) \geq \epsilon$. Based on the values of $y_{i,t,k}$ and $y_{i,t,k'}$, the Boolean function returns true if both R_1 and R_2 are satisfied, or false otherwise. However, how to choose a proper threshold ϵ is challenging, and a single threshold ϵ may not work for all different concepts.
3) *Modeled as conditional probability*. Conditional probabilistic formulation [21] can be considered to model a prerequisite relation as a conditional probability. For example, we can formulate R_1 as $P((y_{i,t,k'} = 1) \Rightarrow (y_{i,t,k} = 1)) = \frac{P(y_{i,t,k}=1,\, y_{i,t,k'}=1)}{P(y_{i,t,k'}=1)}$. It is not trivial to compute $P(y_{i,t,k} = 1, y_{i,t,k'} = 1)$, as both $y_{i,t,k}$ and $y_{i,t,k'}$ represent the learner's latent knowledge states (i.e., latent random variables) on different concepts, which are difficult to observe directly and estimated simultaneously.

To solve these issues, we propose a soft version of R_1 and R_2 as follows.

$\tilde{R}_1$: If the probability $P(y_{i,t,k'} = 1)$ is large, then $P(y_{i,t,k} = 1)$ is larger.

$\tilde{R}_2$: If the probability $P(y_{i,t,k} = 1)$ is small, then $P(y_{i,t,k'} = 1)$ is smaller.

The requirement $\tilde{R}_1$ indicates that if a concept has been mastered with a high probability, then its prerequisite concept would be mastered with an even higher probability. On the other hand, the requirement $\tilde{R}_2$ indicates that if a prerequisite concept has been mastered with a low probability, then the pairwise concept would be mastered with an even lower probability. Accordingly, we further propose an *ordering pair* to formulate $\tilde{R}_1$ and $\tilde{R}_2$ as follows:

$$P(y_{i,t,k'} = 1) \leq P(y_{i,t,k} = 1) \qquad \forall (k, k') \in \mathcal{E} \quad \forall u_i \in \mathcal{U} \quad (1)$$

where $(k, k') \in \mathcal{E}$ denotes all the pairwise prerequisite relations in the given concept map. The advantages of the above *ordering pair* formulation can be analyzed from the following three perspectives.

Authorized licensed use limited to: HUNAN UNIVERSITY. Downloaded on October 18,2022 at 08:41:05 UTC from IEEE Xplore. Restrictions apply.

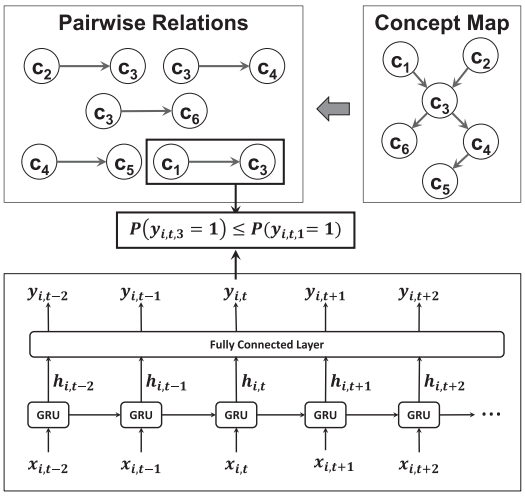

Fig. 4. Modeling educational relations as the mathematical constraints.

1) *Mathematically:* This ordering pair can satisfy both $\tilde{R}_1$ and $\tilde{R}_2$ concurrently. If $P(y_{i,t,k'} = 1)$ is large, then according to (1), $P(y_{i,t,k} = 1)$ is even larger, satisfying $\tilde{R}_1$. If $P(y_{i,t,k} = 1)$ is small, then according to (1), $P(y_{i,t,k'} = 1)$ is even smaller, satisfying $\tilde{R}_2$.
2) *Semantically:* This ordering pair naturally encodes the mastery learning theory that the prerequisite concept is relatively easier to learn than its pairwise concept. Because c_k is the prerequisite concept of $c_{k'}$, the chance that a learner masters concept $c_{k'}$ is lower than concept c_k.
3) *Computationally:* This ordering pair enables the prerequisite relation modeling tractable for optimization. The constraints of R_1 and R_2 are hard to optimize due to the discrete assignments of $y_{i,t,k}$ and $y_{i,t,k'}$. The proposed ordering pair can be either used as a hard constraint or a regularization term for the optimization. In either way, we solve a continuous optimization problem, which is much easier than directly optimizing with R_1 and R_2.

Fig. 4 simply illustrates the educational relation modeling process: All the pairwise relations are first extracted from a concept map, and subsequently, each pair can be formulated as an ordering pair constraint defined by (1). We still take the simplified concept map given in Fig. 1 as an example. Its five prerequisite relations can be extracted and are modeled as the five mathematical constraints

$$\begin{aligned} P(y_{i,t,3} = 1) &\leq P(y_{i,t,1} = 1) \\ P(y_{i,t,3} = 1) &\leq P(y_{i,t,2} = 1) \\ P(y_{i,t,6} = 1) &\leq P(y_{i,t,3} = 1) \\ P(y_{i,t,4} = 1) &\leq P(y_{i,t,3} = 1) \\ P(y_{i,t,5} = 1) &\leq P(y_{i,t,4} = 1). \end{aligned}$$

We will further elaborate on how to incorporate these mathematical constraints into the proposed KT model in Section IV-D.

C. Modeling Topology Information

As discussed earlier, the topology information of the concept map refers to its physical structure, which provides the global dependence information of the interconnected concepts. To convert the graph data into a low dimensional space and maximally preserve its topology information, network embedding [22] can be a natural and effective method. We still take the simplified concept map given in Fig. 1 as an example. Fig. 5 demonstrates the network embedding results, namely the six multi-dimensional vectors from $\mathbf{e}_1$ to $\mathbf{e}_6$. To better visualize these vectors, we adopt *t*-distributed stochastic neighbor embedding (*t*-SNE) [23] to downscale them into two-dimensional space, where we could easily see the topology information of the embedding results. For example, given concepts c_4 and c_6 share the same prerequisite concept c_3, we see that their embeddings $\mathbf{e}_4$ and $\mathbf{e}_6$ are close to each other in the two-dimensional space in Fig. 5 accordingly.

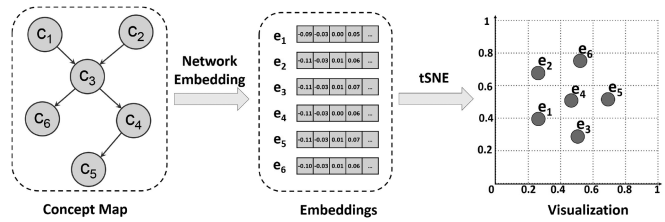

Fig. 5. Illustration of network embedding on the concept map.

Many types of educational relations, such as prerequisite and inclusion, are directional without any cycle, and thus, the corresponding concept map naturally forms a DAG. This DAG property makes the typical random-walk-based network embedding algorithms like Deepwalk [24] and LINE [25] are not suitable. This property also leads to the standard RNN models that are designed for chain structure also being unsuitable. Inspired by the previous DAG-related study [26], [27], we exploit the GRU architecture and propose a novel DAG-GRU network to learn the embedding of concepts and consequently capture the topology information of the concept map.

1) DAG-GRU Network: Similar to the standard GRU unit, each DAG-GRU unit also has a reset gate, an update gate, a temporary hidden state, and an output hidden state. However, the DAG-GRU unit adopts a different approach to compute the input of the gates. As shown in Fig. 6, to learn the embedding of concept c_k, the DAG-GRU unit utilizes two types of input information: *feature vector* $\mathbf{v}_k$ and *hidden input* $\mathbf{m}_k$. The feature vector $\mathbf{v}_k$ can be the one-hot representation of the concept c_k while different from the standard GRU, the hidden input $\mathbf{m}_k$ depends on the prerequisites of concept c_k. Specifically, given $\mathcal{A}_k$ as the prerequisite set of concept c_k

$$\mathcal{A}_k = \{i | (i, k) \in \mathcal{E}\} \tag{2}$$

the hidden input $\mathbf{m}_k$ can be computed by aggregating the embeddings of its prerequisites in $\mathcal{A}_k$ through pooling

$$\mathbf{m}_k = Pool(\{\mathbf{e}_\ell | \ell \in \mathcal{A}_k\}) \tag{3}$$

where $\mathbf{e}_\ell$ is the embedding of the prerequisite concept c_ℓ, and the max-pooling is used for computing $\mathbf{m}_k$.

We still take the simplified concept map in Fig. 1 as an example: Concept c_3 has two prerequisite concepts c_1 and c_2,

Authorized licensed use limited to: HUNAN UNIVERSITY. Downloaded on October 18,2022 at 08:41:05 UTC from IEEE Xplore. Restrictions apply.

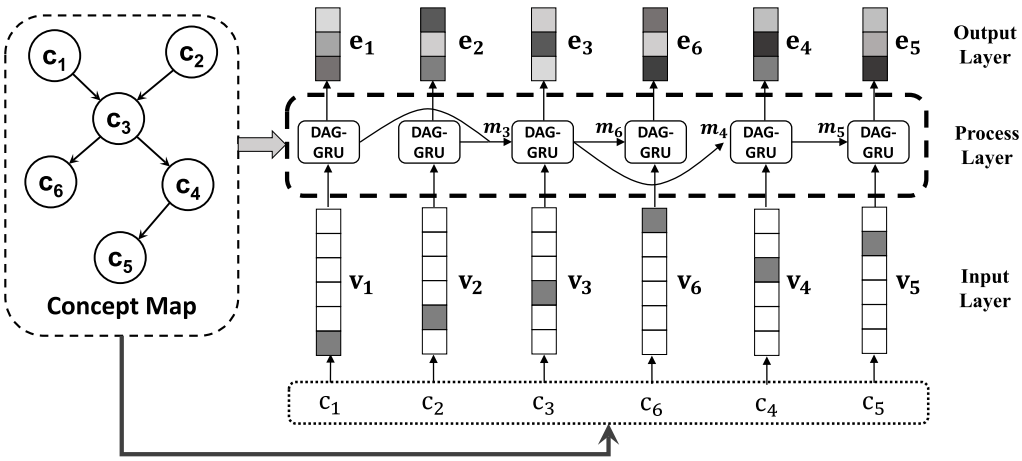

Fig. 6. Concept embedding through DAG-GRU network.

namely $(1,3) \in \mathcal{E}$ and $(2,3) \in \mathcal{E}$. Thus, we have $\mathcal{A}_3 = \{1,2\}$ as the prerequisite set of c_3, and its hidden input $\mathbf{m}_3$ can be computed by max-pooling of $\mathbf{e}_1$ and $\mathbf{e}_2$.

With the defined feature vector $\mathbf{v}_k$ and the hidden input $\mathbf{m}_k$, the proposed DAG-GRU network further applies a series of operations to derive the concept embedding $\mathbf{e}_k$. The operations are similar to the standard GRU [15], and can be simply summarized as follows:

$$\begin{aligned}
\mathbf{r}_k &= \sigma(\mathbf{W}_r\mathbf{v}_k + \mathbf{U}_r\mathbf{m}_k + \mathbf{b}_r)\\
\mathbf{z}_k &= \sigma(\mathbf{W}_z\mathbf{v}_k + \mathbf{U}_z\mathbf{m}_k + \mathbf{b}_z)\\
\tilde{\mathbf{e}}_k &= tanh(\mathbf{W}_e\mathbf{v}_k + \mathbf{U}_e[\mathbf{r}_k \odot \mathbf{m}_k] + \mathbf{b}_e)\\
\mathbf{e}_k &= (1-\mathbf{z}_k) \odot \mathbf{m}_k + \mathbf{z}_k \odot \tilde{\mathbf{e}}_k,
\end{aligned}$$

where $\Theta_c = \{\mathbf{W}_r, \mathbf{U}_r, \mathbf{b}_r, \mathbf{W}_z, \mathbf{U}_z, \mathbf{b}_z, \mathbf{W}_e, \mathbf{U}_e, \mathbf{b}_e\}$ are the internal parameters and $\odot$ is the pointwise multiplication. The obtained concept embedding $\mathbf{e}_k$ essentially incorporates the topology information, where the structure of the DAG-GRU network explicitly follows the topology of the concept map. In addition, this DAG-GRU network can be co-trained with the other parts of the CMKT model.

D. CMKT Model

1) Model Input: As shown in Fig. 3, the inputs of the proposed CMKT model primarily include the learner exercise information and the topology information of the concept map. Specifically, given a sequence of question–answer pairs $\mathbf{s}_i$ for learner u_i, the *question information* can be defined as a $|\mathcal{Q}|$-dimensional one-hot vector $\mathbf{q}_{\pi(i,t)}$, where $\pi(i,t)$th dimension as one and other dimensions as zeros. Assuming we have 10 questions (i.e., $|\mathcal{Q}| = 10$) and the ID of the question answered by learner u_i at time t is 2 (i.e., $\pi(i,t) = 2$), the $|\mathcal{Q}|$-dimensional one-hot vector $\mathbf{q}_{\pi(i,t)}$ would be $\mathbf{q}_2 = [0,1,0,0,0,0,0,0,0,0]$.

Similar to the work in[28], the *answer information* can be represented as a $|\mathcal{Q}|$-dimensional zero vector $\mathbf{0}$. On the other hand, the topology information of the concept map can be obtained from the proposed DAG-GRU network, namely the concept embedding results. We thus define the CMKT model input $\mathbf{x}_{i,t}$ for learner u_i as

$$\mathbf{x}_{i,t} = \begin{cases} \mathbf{q}_{\pi(\mathbf{i},\mathbf{t})} \oplus \mathbf{e}^{\pi(\mathbf{i},\mathbf{t})} \oplus \mathbf{0}, & \text{if } a_{i,t} = 1 \\ \mathbf{0} \oplus \mathbf{q}_{\pi(i,t)} \oplus \mathbf{e}^{\pi(i,t)}, & \text{otherwise} \end{cases} \tag{4}$$

where $\oplus$ is the vector concatenation operator, and $a_{i,t}$ is the binary variable of whether learner u_i correctly answers the question at time t. Moreover, $\mathbf{e}^{\pi(i,t)}$ is the concept embedding result for question $q_{\pi(i,t)}$, and it can be computed by aggregating the embeddings of all concepts in question $q_{\pi(i,t)}$ through pooling

$$\mathbf{e}^{\pi(i,t)} = Pool(\{\mathbf{e}_k | k \in \Phi_{\pi(i,t)}\}) \tag{5}$$

where $\Phi_{\pi(i,t)} = \{k | \mathbf{O}_{\pi(i,t),k} = 1\}$, namely the set of concepts belonging to question $q_{\pi(i,t)}$, and the max-pooling can be used to compute the embedding.

2) Model Output: As indicated earlier, the model aims to learn the knowledge state of learner u_i at time t on concept c_k, denoted as $\{y_{i,t,k} | c_k \in \mathcal{C}\}$. The proposed CMKT model, as shown in Fig. 3, adopts the standard GRU unit to process the above-defined input $\mathbf{x}_{i,t}$

$$\mathbf{h}_{i,t} = \phi(\mathbf{h}_{i,t-1}, \mathbf{x}_{i,t}) \tag{6}$$

where $\mathbf{h}_{i,t}$ and $\mathbf{h}_{i,t-1}$ are the GRU outputs at time t and $t-1$, respectively. The implementation of $\phi(\cdot)$ follows the standard GRU [15], and its internal parameter set can be denoted as Θ_s. Given $y_{i,t,k}$ as the knowledge state of learner u_i on concept c_k at time t, the probability of the learner having mastered that concept can be computed as

$$P(y_{i,t,k} = 1) = \sigma(\mathbf{W}_y\mathbf{h}_{i,t} + \mathbf{b}_y)^T\mathbf{c}_k \tag{7}$$

where $\mathbf{c}_k$ is the one-hot representation of concept k, where the kth dimension as one and other dimensions as zeros. $\mathbf{W}_y$ and $\mathbf{b}_y$ are the internal parameters of the fully connected layer, and $\sigma(\cdot)$ denotes the sigmoid function.

Based on the mastery information on each concept, the model further computes the probability that a learner can correctly answer the next question, which requires that the learner master all the relevant concepts to that question. Thus, given $a_{i,t}$ as the binary variable of whether learner u_i correctly answers the question at time t, its probability can be computed as

Authorized licensed use limited to: HUNAN UNIVERSITY. Downloaded on October 18,2022 at 08:41:05 UTC from IEEE Xplore. Restrictions apply.

TABLE II
STATISTICS OF THE FIVE DATASETS

Statistics	ASSIST	AICFE-CM	AICFE-GE	AICFE-MA	AICFE-PH
Number of Record	88,123	125,726	44,662	66,568	67,874
Number of Learner	1610	2648	1451	2445	964
Average Record/Learner	54.7	47.5	30.8	27.2	70.4
Number of Question	683	655	815	617	483
Question Coverage	8%	7%	4%	4%	15%
Number of Concept	45	21	23	25	19
Number of Relation	50	27	38	27	13

$$P(a_{i,t}=1)=\prod_{k:\mathbf{O}_{\pi(i,t),k}=1} P(y_{i,t-1,k}=1) \tag{8}$$

where $\mathbf{O}_{\pi(i,t),k}=1$ denotes the question $q_{\pi(i,t)}$ that contains concept c_k. Note that $P(a_{i,t}=0)=1-P(a_{i,t}=1)$ by definition.

3) CMKT Model: Considering the model output $a_{i,t}$ described above and the *ordering pair* defined in (1), we propose the objective function for the CMKT model as

$$\max_{\Theta} \prod_i \prod_t P(a_{i,t}|\mathbf{s}_i,\Theta)$$
$$s.t., P(y_{i,t,k'}=1) \leq P(y_{i,t,k}=1)\ \forall\ (k,k') \in \mathcal{E}\ \ \forall u_i \in \mathcal{U} \tag{9}$$

where $\Theta=\Theta_c \cup \Theta_s \cup \{\mathbf{W}_y, \mathbf{b}_y\}$ denotes the internal parameter set, and the hard mathematical constraints are derived from the educational relations in the concept map, where $(k,k') \in \mathcal{E}$ denotes the pairwise prerequisite relations.

We can further relax the above hard constraints as the soft regularization and also introduce the logarithm operator to ensure the scale consistency with the loss term

$$\max_{\Theta} \sum_i \sum_t \log P(a_{i,t}|\mathbf{s}_i,\Theta)$$
$$+\lambda \sum_i \sum_t \sum_{(k,k')\in\mathcal{E}} \log P(y_{i,t,k}=1) - \log P(y_{i,t,k'}=1) \tag{10}$$

where $\lambda > 0$ is a tradeoff parameter. To train the model, we use the Adam optimization algorithm [29] to learn Θ, which is an extension to stochastic gradient descent and is commonly used for deep learning models.

V. EXPERIMENTS

In this section, we first introduce the experimental setup, including the evaluation datasets, baselines, and settings. Then, we evaluate the proposed CMKT model and compare it with the baseline models. Finally, we conduct experiments to illustrate the impact of the important parameters.

A. Experimental Setup

1) Datasets: To fully evaluate the CMKT model, we employ five different public educational datasets in four subjects, namely ASSIST, AICFE-CM, AICFE-GE, AICFE-MA, and AICFE-PH. Specifically, ASSIST refers to the public dataset ASSISTment 2009–2010[1] [30], which has been commonly used for KT and other relevant educational data mining research. All the other four "AICFE-*" datasets are collected from an established online education platform, called *Smart Learner Partner* (SLP),[2] which is developed and maintained by the Advanced Innovation Center for Future Education (AICFE) at Beijing Normal University, China. The SLP platform is currently serving more than 60 000 students from 135 local schools in Beijing, mainly ranging from grade 7 to grade 9. In particular, the datasets AICFE-CM, AICFE-GE, AICFE-MA, and AICFE-PH refer to the subjects of *chemistry*, *geography*, *mathematics,* and *physics*, respectively, which are also available online for research purposes[3].

For the ASSISTment data, we use its "non-skill builder" dataset in mathematics, and the specific filtering operations have been applied to preprocess this dataset. We first choose the sequences generated with "random order" rather than "linear order," as "random order" sequences can avoid possible bias caused by the imposed order. We then choose the sequences that are longer than 30 to ensure sufficient information from the learner side. We finally use the questions that examine a subset of concepts in the subject. Two domain experts were invited to manually label the prerequisite relation, and the resulting Kappa value is 0.83. The first column of Table II gives the detailed statistics of the ASSIST dataset for the experiment. For the AICFE dataset, we also use the questions that examine a subset of concepts in the subject, and for each subject, the prerequisite relations are manually labeled by the two domain experts.

All the labeling work follows the procedure of human expert labeling process [31]. The labeler training includes two rounds of practice before they can be formally recruited. The instructions on the scientific definition of prerequisite relation and the typical examples are given before the labeling. Cohen's Kappa [32] is computed to measure the inter-rater reliability, which are 0.85, 0.90, 0.93, and 0.87 for chemistry, geography, mathematics, and physics, respectively.

Table II illustrates the detailed statistics of the AICFE datasets for the experiment as well. In Table II, the third row "Average Record/Learner" shows the average number of exercise records that each learner has in the dataset, ranging from 27.2 to 70.4, which indicates that the datasets capture the necessary exercise information from all of the learners. The fifth row "Question coverage" is calculated using the above "Average record/learner" further divided by the question number, which roughly describes the percentage of questions each

[1] [Online]. Available: https://sites.google.com/site/assistmentsdata/home/assistment-2009-2010-data

[2] [Online]. Available: http://slp.bnu.edu.cn/

[3] [Online]. Available: http://www.bnu-ai.cn/download-unit

Authorized licensed use limited to: HUNAN UNIVERSITY. Downloaded on October 18,2022 at 08:41:05 UTC from IEEE Xplore. Restrictions apply.

learner answers. The low coverage values range from 4% to 15% in the datasets, which partially demonstrates the severe data sparseness in today's ITS and MOOC platforms, as discussed in the introduction section.

2) Baselines: Four existing KT models are used as baselines, namely BKT [33], probabilistic matrix factorization (PMF) [34], DKT [14], and GKT [35]:

BKT—As described earlier, BKT utilizes a binary variable to model concept mastery. Based on the exercise sequences on the given concept, it essentially utilizes the hidden Markov model (HMM) to update the probabilities of the binary variable. The BKT model inherently assumes that the mastered knowledge will not be forgotten, but factors such as guessing and slipping are considered. BKT is a classic and established model that has been widely used for different KT tasks.

PMF—PMF has been recently adopted to solve the KT problem [34] while the PMF technique is originally designed for a recommender system. It essentially transforms the question-answering problem into a similarity comparison problem, where a learner's performance on a question depends on the similarity between her knowledge state and the question. Specifically, PMF models both learner's knowledge state and question as latent vectors, projects them into the same space for calculating the similarity and eventually predicts learner's performance.

DKT—DKT is the first KT model using the deep learning techniques and the RNN structure, where the long short-term memory (LSTM) unit is adopted. The proposed CMKT model adopts a similar RNN structure as DKT (using GRU rather than LSTM) but incorporates the educational relation information and topological information explicitly and properly from the concept map.

GKT—GKT uses a graph neural network model to trace learner's knowledge states. By leveraging the given knowledge structure, GKT computes the new mastery state of the concept by aggregating its neighbor concept states first, then updates neighbors based on the computed state. Consequently, GKT estimates learner's knowledge states on all the concepts.

CMKT-C—In addition to these four baseline models, we also construct the CMKT model *without* incorporating the topology information of the concept map (i.e., no concept embedding at the input vector), and refer to it as the *CMKT-C* model. All the other parts, including its GRU structure and mathematical constraints derived from educational relations, are the same as the proposed CMKT model.

3) Evaluation Setting: We evaluate the KT models from the perspectives of both classification and regression. Considering it as a classification problem, the exercise results are regarded as a binary variable, where 0 represents incorrect answer and 1 represents correct answer. Accordingly, the *area under ROC curve* (AUC) and the *overall prediction accuracy* (ACC) can be used as two metrics for the model evaluation. On the other hand, considering it a regression problem, the exercise results are regarded as a continuous variable ranging from 0 and 1. Accordingly, the *mean absolute error* (MAE) and the *root-mean-square error* (RMSE) can be used as two metrics for the model evaluation. In the experiment, for each dataset, 90% data are randomly selected as the training data, and the remaining 10% is used as the testing data. We repeat the experiment 10 times and report the average results of all four metrics.

For both the CMKT and CMKT-C models, we set their GRU hidden state sizes to 32, and the tradeoff parameters λ to 0.1. The parameter selection process and the impact of employing different values are described in Section V-C. As indicated earlier, the Adam optimization algorithm is used for the model training, whose initial learning rate and the iteration number are set to 0.01 and 500, respectively. The models are implemented using Tensorflow in Python on a Linux server, which consists of 128 GB of RAM, two Intel Xeon Processor E5-2683 v3 CPUs, and one GeForce GTX TITAN X GPU.

B. Evaluation Results

Fig. 7 illustrates the evaluation results of the four metrics, namely AUC, ACC, MAE, and RMSE, on all five datasets. We have several key observations from the figure: First, compared to other existing models, both the CMKT and CMKT-C models obtain higher AUC and ACC and lower MAE and RMSE on all the datasets. Specifically, over the five datasets, the average AUC, ACC, MAE, and RMSE of CMKT are 0.82, 0.75, 0.32, and 0.41, respectively. Compared to the baseline models, CMKT achieves an increase of 12.2% and 9.2% on AUC and ACC at least, and a decrease of 19.7% and 9.1% on MAE and RMSE at least. These results validate that the information from the concept map significantly improves the accuracy of estimating learner's knowledge state for the KT problem. Second, the CMKT model performs better than the CMKT-C model on all the key metrics, which shows that the topological information from the concept map and the proposed DAG-GRU embedding approach effectively enhances the model performance. Third, the baseline models PMF and BKT show the inconsistent performance on different datasets. For example, PMF outperforms BKT on ASSIST and AICFE-CM datasets while BKT performs better on the other datasets. In contrast, the CMKT, CMKT-C, DKT, and GKT models have a more consistent performance on all five datasets, which implies that the deep-learning-based models might have a more robust property. Fourth, comparing AUC and ACC to MAE and RMSE on all datasets, the results are consistent with both the classification and the regression metrics.

To further observe how the models behave at a different level of the learner exercise data, we conduct experiments with 50%, 60%, 70%, and 80% of training data and the rest for testing. Fig. 8 shows how the performance changes w.r.t. different percentages of the training samples, where the four metrics on the five datasets are adopted for evaluation. From Fig. 8, we see that the performance of the CMKT model consistently improves as the training size increases on all five datasets and four metrics.

C. Impact of the Key Parameters

As indicated earlier, we conduct experiments to determine the optimal model parameters, including both GRU hidden state size and the tradeoff parameter λ in (10). Besides, we

Authorized licensed use limited to: HUNAN UNIVERSITY. Downloaded on October 18,2022 at 08:41:05 UTC from IEEE Xplore. Restrictions apply.

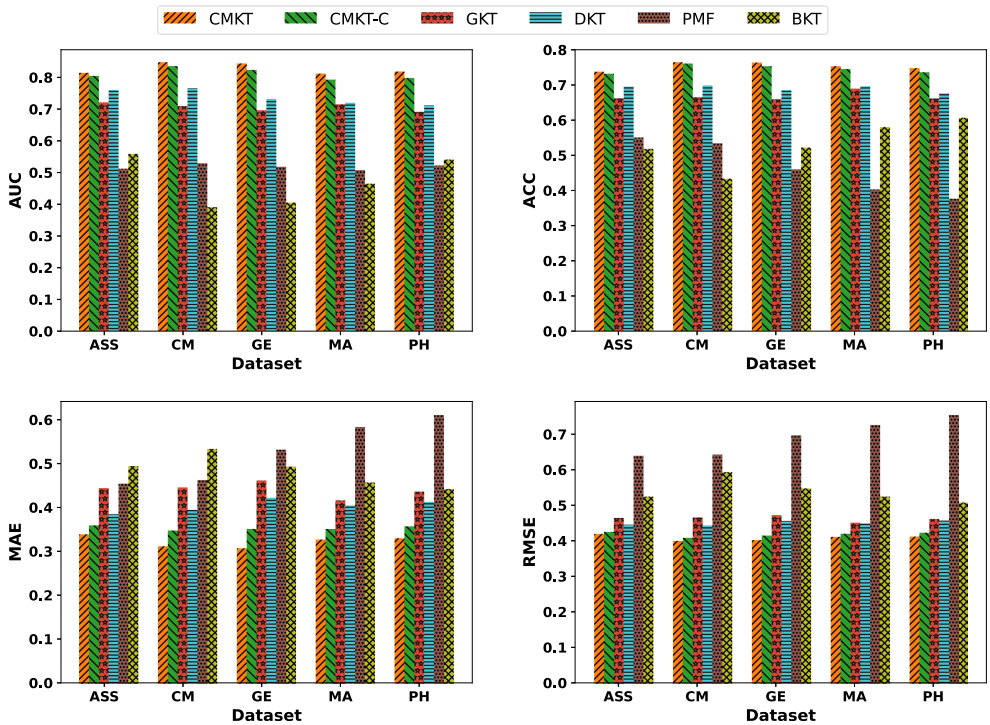

Fig. 7. Experimental results compared to the baselines, where ASS, CM, GE, MA, and PH represent the datasets of ASSIST, AICFE-CM, AICFE-GE, AICFE-MA, and AICFE-PH, respectively.

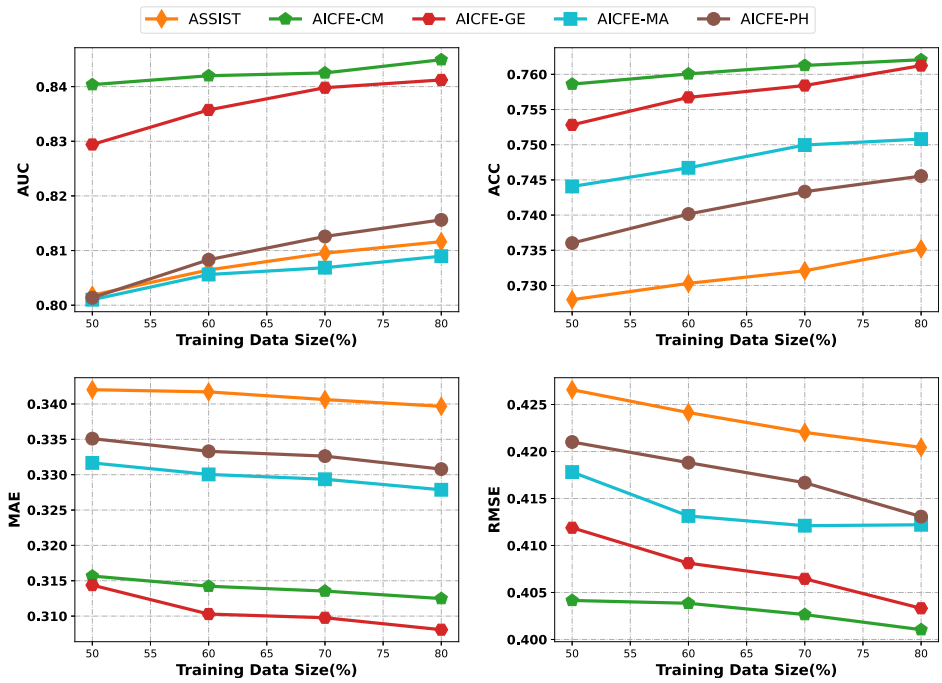

Fig. 8. Experimental results using different training data sizes.

also design the experiment to evaluate the model performance change w.r.t. the number of the incorporated prerequisite relations, which might be another influential parameter.

1) Impact of the model parameters: Figs. 9 and 10 illustrate the impact of the hidden state size and the tradeoff parameter λ on the models of CMKT and CMKT-C, respectively.

Hidden state size: Fig. 9 illustrates how the performance varies with different hidden state sizes of the GRU network, from 8 to 256, on both models of CMKT and CMKT-C. From Fig. 9(a), we see that the performance of the CMKT model starts increasing from 8 units and achieves its peak at 32 on most of the five datasets. After that, its performance continuously declines and receives the worst results at 256 on all the

Authorized licensed use limited to: HUNAN UNIVERSITY. Downloaded on October 18,2022 at 08:41:05 UTC from IEEE Xplore. Restrictions apply.

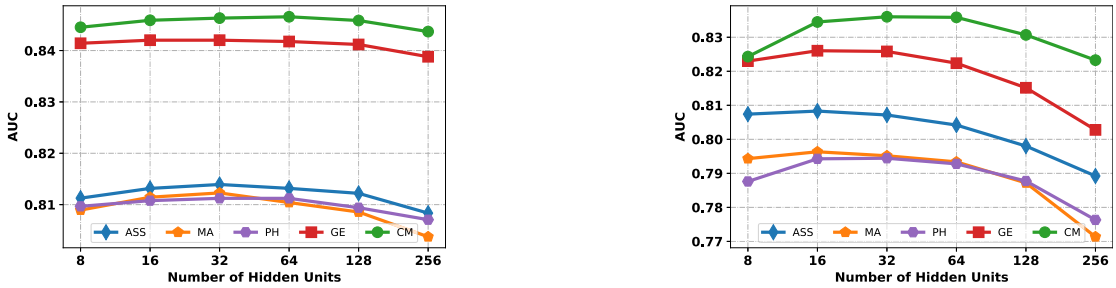

(a) CMKT (b) CMKT-C

Fig. 9. Performance impact of the hidden state size of GRU, where ASS, CM, GE, MA, and PH represent the datasets of ASSIST, AICFE-CM, AICFE-GE, AICFE-MA, and AICFE-PH, respectively. (a) CMKT. (b) CMKT-C.

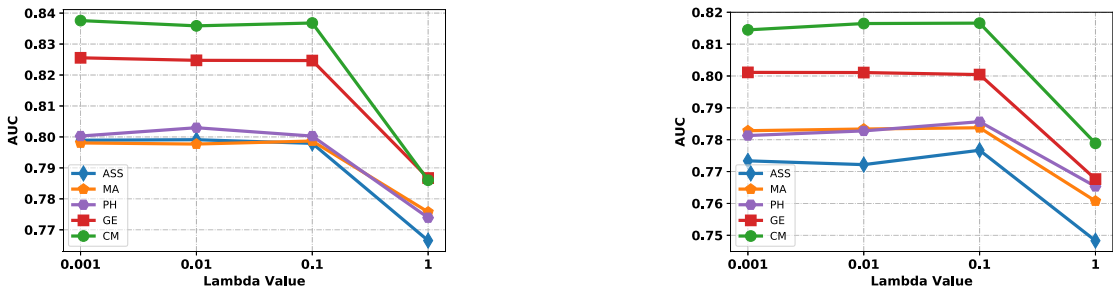

(a) CMKT (b) CMKT-C

Fig. 10. Impact of the parameter λ, where ASS, CM, GE, MA, and PH represent the datasets of ASSIST, AICFE-CM, AICFE-GE, AICFE-MA, and AICFE-PH, respectively. (a) CMKT. (b) CMKT-C.

five datasets. Fig. 9(b) shows similar performance from the CMKT-C model, and we thus set the hidden state size to 32 for both models in the experiments.

Parameter λ: Fig. 10 shows how the performance varies with different values of λ, from 0.001 to 1, on both models of CMKT and CMKT-C. From Fig. 10(a), we see that the performance of the CMKT model continues to slightly improve by increasing the value from 0.001 to 0.1 on most of the five datasets while one peak appears at 0.01 on the dataset of AICFE-PH. The performance then dramatically drops and receives the worst results when λ is set to 1. Fig. 10(b) shows a similar trend on the CMKT-C model, and we thus set the tradeoff parameter λ to 0.1 for both the models of CMKT and CMKT-C.

2) Impact of the prerequisite number: We also investigate the impact of the prerequisite number by changing the percentage of the prerequisite pairs used in the models, from 20%, 40%, 60%, 80% to 100%, on the four metrics. To facilitate an easier comparison in the figure, we only demonstrate the performance of the three datasets, including ASSIST, AICFE-CM, and AICFE-GE, and Fig. 11 shows the experimental results. On all four metrics, i.e., from Fig. 11(a) to (d), we see that the performance of both CMKT and CMKT-C monotonically improves with the number of the prerequisite pair increasing. These results partially verify the usefulness and effectiveness of incorporating such educational relations into the KT model. We also see that across all percentages, the CMKT model always outperforms the CMKT-C model on the given datasets. For example, the solid line always sits above the dotted line with the same color in both Fig. 11(a) and (b). These results thus demonstrate the effectiveness of incorporating the topological information from the concept map as well. In addition, we observe similar performance with the other two datasets AICFE-MA and AICFE-PH, although they are not presented in Fig. 11.

VI. Discussion

A. Educational Relation Types

For the educational relation modeling, we primarily choose the prerequisite relation as an exemplary case and show how it can be modeled as the ordering pair and then formulated as a form of constraints in the proposed objective function. The basic idea is using the ordering pair to encode the relation information, where the more advanced a concept is, the more difficult it is to be mastered by learners. Hence, such a design can be naturally applied to many other educational relations (e.g., inclusion relation and progressive relation), as long as the given relation implies that the two concepts need to be learned in a specific order or in stages. Accordingly, more complex concept maps with multiple types of educational relations can be utilized in the KT problem, where different objective functions might be formulated but similar constraints can be derived as the prerequisite ones.

B. Educational Relation Intensity

We use a tradeoff parameter λ to regularize the ordering pair constraint in the objective function of the proposed CMKT

Authorized licensed use limited to: HUNAN UNIVERSITY. Downloaded on October 18,2022 at 08:41:05 UTC from IEEE Xplore. Restrictions apply.

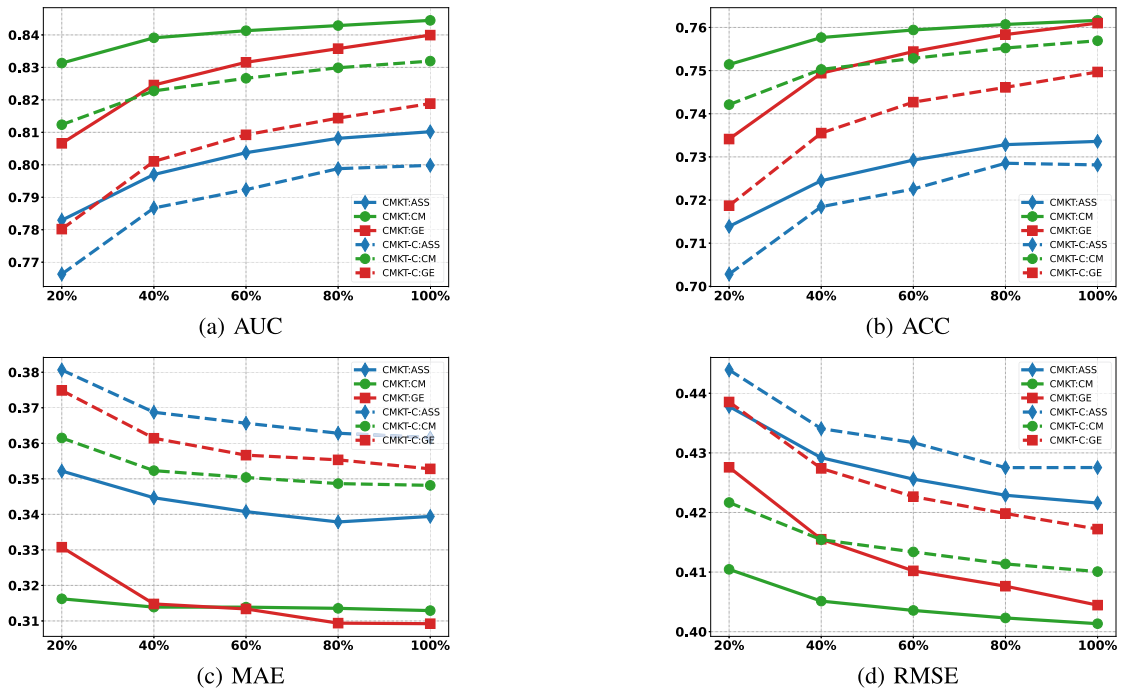

Fig. 11. Impact of the prerequisite pair number. Lines with different markers represent different datasets. Solid lines represent the model of CMKT and the dotted lines represent the model of CMKT-C. ASS, CM, and GE represent the datasets of ASSIST, AICFE-CM, and AICFE-GE, respectively. (a) AUC. (b) ACC. (c) MAE. (d) RMSE.

model. Intuitively, the larger λ is, the stronger the ordering pair constraint is, and λ essentially encodes the prerequisite intensity. However, from the perspectives of domain knowledge and learner's cognitive process, one prerequisite may be more important than another one; thus, how to enforce such an intensity difference might be also useful for KT models. In this article, we simply define one λ for all the relation pairs, and how to assign different λ values to quantize the relation intensity for different pairs should be addressed in future research.

C. Heterogeneous Concept Map

To integrate topological information from the concept map, the proposed concept embedding approach assumes the given concept map to be a DAG, when it consists of one specific educational relation. However, when multiple types of educational relations co-exist in one concept map (e.g., prerequisite relation and inclusion relation), the current assumption might be violated, and accordingly, the proposed concept embedding approach might not be applicable. Other network embedding techniques then can be considered for such heterogeneous concept maps, which is an interesting research problem and worth further investigation.

D. Explainable CMKT Model

The proposed CMKT model mainly adopts the deep learning model (i.e., RNN) to predict whether a learner could answer the question correctly. While the model principally computes the concept mastery probability using the GRU outputs, it is still hard to explicitly explain the model's internal knowledge representation like other deep learning models and thus difficult for users to understand. Some explainable AI techniques might be introduced to interpret the model and facilitate the model understanding, especially for the educators and teachers. Meanwhile, some cognitive factors from the learner's perspective can be tentatively introduced to help explain model outputs, such as slipping (i.e., mastered the concepts but answered the question incorrectly) and guessing (i.e., not mastered the concepts but answered the question correctly).

VII. Related Work

A. Knowledge Tracing

Researchers have explored different approaches to conduct KT. Earlier work focuses on the BKT model, which defines each learner's knowledge state as a binary variable and utilizes probabilistic models like HMM to estimate each learner's concept mastery [1]. Subsequently, researchers improve the model by considering cognitive factors like slipping and guessing [33]. Different types of information like individual learner's ability [36], [37], difficulty level of questions [38], knowledge prior [39], and learning time [40] were also explored to design more accurate models. To handle the partially correct responses to subjective problems, a fuzzy cognitive diagnosis framework was proposed [41]. Recently, with the development of deep learning, DKT and its related models were proposed to model the learners' exercise sequences [14] and compared with other traditional methods [42]. Subsequently, the KT models were further improved with prediction-consistent regularization [43] and matrix factorization method [34]. The attention network [28], dynamic key-value memory network [44], and graph neural network [35] were

Authorized licensed use limited to: HUNAN UNIVERSITY. Downloaded on October 18,2022 at 08:41:05 UTC from IEEE Xplore. Restrictions apply.

also introduced to better represent question semantics and improve the KT performance. In addition, researchers recently also used functional magnetic resonance imaging signals to improve KT models [45].

The previous KT models primarily rely on the exercise and activity data from the learner side, but modeling domain knowledge for KT is underexplored. The GKT model [35] applies the graph neural network for KT, where the coursework is structured as a graph. The SKT model [46] exploits the multiple relations in knowledge structure to model the influence propagation among concepts. Some other related studies focused on mining educational relations without considering them to assist KT [47]–[51]. One recent study jointly discovered the prerequisite graph and estimated the learner concept mastery [52], and the earlier one introduces the prerequisites as a new layer in the Bayesian network [53]. Our earlier work [54] utilizes the prerequisite relation to improve the KT performance but does not consider the topological information in the concept map.

B. Concept Map

In the education realm, the concept map [11] refers to a graphical representation of domain knowledge, where nodes represent pedagogical concepts and the interconnected links reflect the relations with educational significance. From the perspective of learning science, the concept map is in accordance with the knowledge space theory [12], which describes a natural dependence between pedagogical concepts in the objective domain knowledge and subjective learner cognitive process. The concept map thus becomes a powerful tool for supporting learner's cognitive development and knowledge acquisition process [55], which has been proven useful in eliciting and improving learning achievement on different subjects [56]. Furthermore, the concept map can be used to help formative assessment [57], [58], instant feedback [59], reading list generation [60], and question-answering systems [61].

Traditionally, most concept maps are manually built by domain experts or experienced teachers [62] while some researchers have attempted to construct the concept map using machine learning or related approaches recently. For example, researchers have applied text mining techniques to academic articles [63], the joint optimization algorithms to textbook [64], deep learning models to curriculum standards [65], probabilistic methods to learner performance data [66], and nearest-neighbor search approach to online courses [67]. All the concept maps used in this article are constructed manually way and have been carefully validated.

C. Constraint Learning

Constraint learning has been a popular approach for incorporating domain knowledge in prediction. For example, Markov logic network [17] and probabilistic soft logic [18] model constraints in the form of first-order logic. Comparatively, the proposed approach of modeling the learner concept mastery in an ordering pair form is more flexible than logic to formulate the mathematical constraints. There are also nonlogic forms of modeling constraints, e.g., constraint-driven learning [19], generalized expectation [68], posterior regularization [20], conditional probabilistic formulation [21], and robust RegBayes [69], but all these methods do not consider how to use constraints in deep learning models. In addition, some recent attempts try to use logic rules in knowledge network embedding [70], deep neural networks [71], and text embedding for relation extraction [72]. However, they are designed for different applications other than the KT problem and have to model the constraints in a logic form.

D. Network Embedding

Network embedding has been intensively studied in the past several years [73], [74]. Earlier studies focus on the methods like Deepwalk [24], LINE [25], node2vec [75], metapath2-vec [76], and VERSE [77] while the matrix-factorization-based methods like GraRep [78], NetMF [22], and NetSMF [79] have been also explored. However, these methods primarily focus on general graphs rather than DAGs. Recently, the deep-learning-based methods have been proposed for network embedding [80], [81]. Specifically, there are also a handful of works utilizing RNNs for network embedding. For example, a DAG-RNN is developed to model the protein structure in [82], and another DAG-RNN is developed for image scene labeling in [26]. Similarly, a DAG-LSTM is developed for modeling semantic compositionality in natural language processing in [83], and a DAG-LSTM is also proposed to improve the proximity search on heterogeneous graphs [84]. Comparatively, we consider concept embedding to exploit the topology of the concept map with the ultimate goal of coupling embedding vectors with a special task of learner concept mastery estimation.

VIII. Conclusion

In this article, we have proposed the CMKT model to tackle the learner data sparseness issue by leveraging the concept map and then performing a more accurate estimation of the learner's knowledge state. We first model the educational relations from the concept map as the ordering pairs and mathematical constraints to construct the model objective function. We then propose the concept embedding techniques to incorporate the topological information from the concept map into the model. We have demonstrated the promise of this model on five different public educational datasets from four different subjects, and the experimental results show that the AUC and ACC of the model achieve 0.82 and 0.75, respectively, improving all the baselines by 12.2% and 9.2%, respectively, on the five datasets.

On a broader canvas, the proposed CMKT model demonstrates the benefits of using the information from the domain knowledge for modeling the human cognitive process. In other words, it partially informs that human's knowledge state is closely related to the natural dependencies of the objective structure of domain knowledge, which is in accordance with the knowledge space theory. We believe that many novel learner models, including but not limited to KT models, can be inspired and implemented using a similar design philosophy,

Authorized licensed use limited to: HUNAN UNIVERSITY. Downloaded on October 18,2022 at 08:41:05 UTC from IEEE Xplore. Restrictions apply.

which would eventually advance the development of ITSs as well as other intelligent platforms for the education domain.

REFERENCES

[1] A. T. Corbett and J. R. Anderson, "Knowledge tracing: Modeling the acquisition of procedural knowledge," *User Model. User-Adapted Interact.*, vol. 4, no. 4, pp. 253–278, 1994.

[2] R. Pelánek, "Bayesian knowledge tracing, logistic models, and beyond: An overview of learner modeling techniques," *User Model. User-Adapted Interact.*, vol. 27, no. 3–5, pp. 313–350, 2017.

[3] A. M. Kaplan and M. Haenlein, "Higher education and the digital revolution: About MOOCs, SPOCs, social media, and the cookie monster," *Bus. Horiz.*, vol. 59, no. 4, pp. 441–450, 2016.

[4] Z. A. Pardos, Y. Bergner, D. T. Seaton, and D. E. Pritchard, "Adapting Bayesian knowledge tracing to a massive open online course in EDX," *Educ. Data Mining*, vol. 13, pp. 137–144, 2013.

[5] L. Rai and D. Chunrao, "Influencing factors of success and failure in MOOC and general analysis of learner behavior," *Int. J. Inf. Educ. Technol.*, vol. 6, no. 4, 2016, Art. no. 262.

[6] M. Khajah, R. Wing, R. Lindsey, and M. Mozer, "Integrating latent-factor and knowledge-tracing models to predict individual differences in learning," *Educ. Data Mining*, vol. 2014, pp. 1–8, 2014.

[7] Z. Huang et al., "Question difficulty prediction for reading problems in standard tests," in *Proc. 31st AAAI Conf. Artif. Intell.*, 2017, pp. 1352–1359.

[8] A. Muhammad, Q. Zhou, G. Beydoun, D. Xu, and J. Shen, "Learning path adaptation in online learning systems," in *Proc. IEEE 20th Int. Conf. Comput. Supported Cooperative Work Des.*, 2016, pp. 421–426.

[9] S. C. Wong, A. Gatt, V. Stamatescu, and M. D. McDonnell, "Understanding data augmentation for classification: When to warp?," in *Proc. Int. Conf. Digit. Image Comput.: Techn. Appl.*, 2016, pp. 1–6.

[10] S. J. Pan and Q. Yang, "A survey on transfer learning," *IEEE Trans. Knowl. Data Eng.*, vol. 22, no. 10, pp. 1345–1359, Oct. 2010.

[11] J. D. Novak and D. B. Gowin, *Learning How to Learn*. Cambridge, U.K.: Cambridge Univ. Press, 1984.

[12] J.-P. Doignon and J.-C. Falmagne, "Spaces for the assessment of knowledge," *Int. J. Man- Mach. Stud.*, vol. 23, no. 2, pp. 175–196, 1985.

[13] H. Cai, V. W. Zheng, and K. C. Chang, "A comprehensive survey of graph embedding: Problems, techniques and applications," *IEEE Trans. Knowl. Data Eng.*, vol. 30, no. 9, pp. 1616–1637, Sep. 2018.

[14] C. Piech et al., "Deep knowledge tracing," in *Proc. Adv. Neural Inf. Process. Syst.*, 2015, pp. 505–513.

[15] K. Cho et al., "Learning phrase representations using RNN encoder-decoder for statistical machine translation," in *Proc. EMNLP*, 2014, pp. 1724–1734.

[16] H. F. Gallego, "All our children learning. a primer for parents, teachers and other educators," *Revista de la Universidad de La Salle*, vol. 3, no. 8, pp. 98–98, 1983.

[17] M. Richardson and P. Domingos, "Markov logic networks," *Mach. Learn.*, vol. 62, no. 1/2, pp. 107–136, 2006.

[18] S. H. Bach, M. Broecheler, B. Huang, and L. Getoor, "Hinge-loss Markov random fields and probabilistic soft logic," *J. Mach. Learn. Res.*, vol. 18, no. 1, pp. 3846–3912, 2017.

[19] M.-W. Chang, L. Ratinov, and D. Roth, "Structured learning with constrained conditional models," *Mach. Learn.*, vol. 88, no. 3, pp. 399–431, Sep. 2012.

[20] K. Ganchev, J. Graça, J. Gillenwater, and B. Taskar, "Posterior regularization for structured latent variable models," *J. Mach. Learn. Res.*, vol. 11, pp. 2001–2049, Aug. 2010.

[21] V. W. Zheng and K. C. Chang, "Regularizing structured classifier with conditional probabilistic constraints for semi-supervised learning," in *Proc. 25th ACM Int. Conf. Inf. Knowl. Manage.*, 2016, pp. 1029–1038.

[22] J. Qiu, Y. Dong, H. Ma, J. Li, K. Wang, and J. Tang, "Network embedding as matrix factorization: Unifying DeepWalk, LINE, PTE, and node2vec," in *Proc. 11th ACM Int. Conf. Web Search Data Mining*, 2018, pp. 459–467.

[23] M. C. Cieslak, A. M. Castelfranco, V. Roncalli, P. H. Lenz, and D. K. Hartline, "t-distributed stochastic neighbor embedding (t-SNE): A tool for eco-physiological transcriptomic analysis," *Mar. Genomic.*, vol. 51, 2020, Art. no. 100723.

[24] B. Perozzi, R. Al-Rfou, and S. Skiena, "Deepwalk: Online learning of social representations," in *Proc. 20th ACM SIGKDD Int. Conf. Knowl. Discov. Data Mining*, 2014, pp. 701–710.

[25] J. Tang, M. Qu, M. Wang, M. Zhang, J. Yan, and Q. Mei, "LINE: Large-scale information network embedding," in *Proc. 24th Int. Conf. World Wide Web*, 2015, pp. 1067–1077.

[26] B. Shuai, Z. Zuo, B. Wang, and G. Wang, "DAG-recurrent neural networks for scene labeling," in *Proc. IEEE Conf. Comput. Vis. Pattern Recognit.*, 2016, pp. 3620–3629.

[27] Z. Liu et al., "Distance-aware DAG embedding for proximity search on heterogeneous graphs," in *Proc. AAAI Conf. Artif. Intell.*, 2018, pp. 2355–2362.

[28] Q. Liu et al., "EKT: Exercise-aware knowledge tracing for student performance prediction," *IEEE Trans. Knowl. Data Eng.*, vol. 33, no. 1, pp. 100–115, Jan. 2019.

[29] D. P. Kingma and J. Ba, "Adam: A method for stochastic optimization," 2014, *arXiv:1412.6980*.

[30] M. Feng, N. Heffernan, and K. Koedinger, "Addressing the assessment challenge with an online system that tutors as it assesses," *User Model. User-Adapted Interact.*, vol. 19, no. 3, pp. 243–266, 2009.

[31] S. Aslan et al., "Human expert labeling process (HELP): Towards a reliable higher-order user state labeling process and tool to assess student engagement," *Educ. Technol.*, vol. 57, no. 1, pp. 53–59, 2017.

[32] M. L. McHugh, "Interrater reliability: The Kappa statistic," *Biochemia Medica*, vol. 22, no. 3, pp. 276–282, 2012.

[33] R. S. Baker, A. T. Corbett, and V. Aleven, "More accurate student modeling through contextual estimation of slip and guess probabilities in Bayesian knowledge tracing," in *Proc. Int. Conf. Intell. Tutoring Syst.*, 2008, pp. 406–415.

[34] N. Thai-Nghe, L. Drumond, T. Horváth, A. Krohn-Grimberghe, A. Nanopoulos, and L. Schmidt-Thieme, "Factorization techniques for predicting student performance," in *Educational Recommender Systems and Technologies: Practices and Challenges*. Hershey, PA, USA: IGI Global, 2012, pp. 129–153.

[35] H. Nakagawa, Y. Iwasawa, and Y. Matsuo, "Graph-based knowledge tracing: Modeling student proficiency using graph neural network," in *Proc. IEEE/WIC/ACM Int. Conf. Web Intell.*, 2019, pp. 156–163.

[36] M. V. Yudelson, K. R. Koedinger, and G. J. Gordon, "Individualized Bayesian knowledge tracing models," in *Proc. Int. Conf. Artif. Intell. Educ.*, 2013, pp. 171–180.

[37] R. Liu and K. R. Koedinger, "Towards reliable and valid measurement of individualized student parameters," in *Proc. 10th Int. Conf. Educ. Data Mining*, 2017, pp. 135–142.

[38] Z. A. Pardos and N. T. Heffernan, "KT-idem: Introducing item difficulty to the knowledge tracing model," in *Proc. Int. Conf. User Model., Adapt., Personalization*, 2011, pp. 243–254.

[39] Y. Chen et al., "Tracking knowledge proficiency of students with educational priors," in *Proc. ACM Conf. Inf. Knowl. Manage.*, 2017, pp. 989–998.

[40] R. S. Baker, A. B. Goldstein, and N. T. Heffernan, "Detecting learning moment-by-moment," *Int. J. Artif. Intell. Educ.*, vol. 21, no. 1–2, pp. 5–25, 2011.

[41] R. Wu et al., "Cognitive modelling for predicting examinee performance," in *Proc. Int. Joint Conf. Artif. Intell.*, 2015, pp. 1017–1024.

[42] X. Xiong, S. Zhao, E. Van Inwegen, and J. Beck, "Going deeper with deep knowledge tracing," in *Proc. Int. Educ. Data Mining Soc.*, 2016, pp. 545–550.

[43] C.-K. Yeung and D.-Y. Yeung, "Addressing two problems in deep knowledge tracing via prediction-consistent regularization," in *Proc. 5th Annu. ACM Conf. Learn. Scale*, 2018, Art. no. 5.

[44] J. Zhang, X. Shi, I. King, and D.-Y. Yeung, "Dynamic key-value memory networks for knowledge tracing," in *Proc. 26th Int. Conf. World Wide Web*, 2017, pp. 765–774.

[45] D. Halpern et al., "Knowledge tracing using the brain," in *Proc. Educ. Data Mining*, 2018, pp. 219–228.

[46] S. Tong et al., "Structure-based knowledge tracing: An influence propagation view," in *Proc. IEEE Int. Conf. Data Mining*, 2020, pp. 541–550.

[47] Y. Yang, H. Liu, J. Carbonell, and W. Ma, "Concept graph learning from educational data," in *Proc. 8th ACM Int. Conf. Web Search Data Mining*, 2015, pp. 159–168.

[48] C. Liang, Z. Wu, W. Huang, and C. L. Giles, "Measuring prerequisite relations among concepts," in *Proc. Conf. Empirical Methods Natural Lang. Process.*, 2015, pp. 1668–1674.

[49] C. Liang, J. Ye, Z. Wu, B. Pursel, and C. L. Giles, "Recovering concept prerequisite relations from university course dependencies," in *Proc. AAAI Conf. Artif. Intell.*, 2017, pp. 4786–4791.

[50] L. Pan, C. Li, J. Li, and J. Tang, "Prerequisite relation learning for concepts in MOOCs," in *Proc. 55th Annu. Meeting Assoc. Comput. Linguistics*, 2017, pp. 1447–1456.

Authorized licensed use limited to: HUNAN UNIVERSITY. Downloaded on October 18,2022 at 08:41:05 UTC from IEEE Xplore. Restrictions apply.

[51] S.-Y. Teng, J. Li, L. P.-Y. Ting, K.-T. Chuang, and H. Liu, "Interactive unknowns recommendation in e-learning systems," in *Proc. IEEE Int. Conf. Data Mining*, 2018, pp. 497–506.
[52] Y. Chen, J. P. González-Brenes, and J. Tian, "Joint discovery of skill prerequisite graphs and student models," in *Proc. 9th Int. Conf. Educ. Data Mining*, 2016, pp. 46–53.
[53] C. Carmona, E. Millán, J. Pérez-de-la-Cruz, M. Trella, and R. Conejo, "Introducing prerequisite relations in a multi-layered Bayesian student model," in *Proc. 10th Int. Conf. User Model.*, 2005, pp. 347–356.
[54] P. Chen, Y. Lu, V. W. Zheng, and Y. Pian, "Prerequisite-driven deep knowledge tracing," in *Proc. IEEE Int. Conf. Data Mining*, 2018, pp. 39–48.
[55] J. D. Novak, *Learning, Creating, and Using Knowledge: Concept Maps as Facilitative Tools in Schools and Corporations*. Evanston, IL, USA: Routledge, 2010.
[56] S. Y. Kwon and L. Cifuentes, "The comparative effect of individually-constructed vs. collaboratively-constructed computer-based concept maps," *Comput. Educ.*, vol. 52, no. 2, pp. 365–375, 2009.
[57] R. Hartmeyer, M. P. Stevenson, and P. Bentsen, "A systematic review of concept mapping-based formative assessment processes in primary and secondary science education," *Assessment Educ.: Principles, Policy, Pract.*, vol. 25, no. 6, pp. 598–619, 2018.
[58] R. E. Bennett, "Formative assessment: A critical review," *Assessment Educ.: Principles, Policy, Pract.*, vol. 18, no. 1, pp. 5–25, 2011.
[59] P.-H. Wu, G.-J. Hwang, M. Milrad, H.-R. Ke, and Y.-M. Huang, "An innovative concept map approach for improving students' learning performance with an instant feedback mechanism," *Brit. J. Educ. Technol.*, vol. 43, no. 2, pp. 217–232, 2012.
[60] J. G. Jardine, "Automatically generating reading lists," Comput. Lab., Univ. Cambridge, Cambridge, U.K., Tech. Rep. UCAM-CL-TR-848, 2014.
[61] J. Ding, Y. Wang, W. Hu, L. Shi, and Y. Qu, "Answering multiple-choice questions in geographical Gaokao with a concept graph," in *Proc. Eur. Semantic Web Conf.*, 2018, pp. 161–176.
[62] J. D. Novak and A. J. Cañas, "The theory underlying concept maps and how to construct them," *Florida Inst. Hum. Mach. Cogn.*, vol. 1, pp. 2006–2001, 2006.
[63] N.-S. Chen et al., "Mining e-learning domain concept map from academic articles," *Comput. Educ.*, vol. 50, no. 3, pp. 1009–1021, 2008.
[64] S. Wang et al., "Using prerequisites to extract concept maps from textbooks," in *Proc. 25th ACM Int. Conf. Inf. Knowl. Manage.*, 2016, pp. 317–326.
[65] P. Chen, Y. Lu, V. W. Zheng, X. Chen, and B. Yang, "KnowEdu: A system to construct knowledge graph for education," *IEEE Access*, vol. 6, pp. 31 553–31 563, 2018.
[66] D. S. Chaplot, Y. Yang, J. G. Carbonell, and K. R. Koedinger, "Data-driven automated induction of prerequisite structure graphs," in *Proc. Int. Educ. Data Mining Soc.*, 2016, pp. 318–323.
[67] H. Liu, W. Ma, Y. Yang, and J. Carbonell, "Learning concept graphs from online educational data," *J. Artif. Intell. Res.*, vol. 55, pp. 1059–1090, 2016.
[68] G. S. Mann and A. McCallum, "Generalized expectation criteria for semi-supervised learning with weakly labeled data," *J. Mach. Learn. Res.*, vol. 11, pp. 955–984, 2010.
[69] S. Mei, J. Zhu, and J. Zhu, "Robust RegBayes: Selectively incorporating first-order logic domain knowledge into Bayesian models," in *Proc. Int. Conf. Mach. Learn.*, 2014, pp. 253–261.
[70] S. Guo, Q. Wang, L. Wang, B. Wang, and L. Guo, "Knowledge graph embedding with iterative guidance from soft rules," in *Proc. AAAI Conf. Artif. Intell.*, 2018, pp. 4816–4823.
[71] Z. Hu, X. Ma, Z. Liu, E. H. Hovy, and E. P. Xing, "Harnessing deep neural networks with logic rules," in *Proc. 54th Annu. Meeting Assoc. Comput. Linguistics*, 2016, pp. 2410–2420.
[72] T. Rocktäschel, S. Singh, and S. Riedel, "Injecting logical background knowledge into embeddings for relation extraction," in *Proc. Conf. North Amer. Chapter Assoc. Comput. Linguistics - Hum. Lang. Technol.*, 2015, pp. 1119–1129.
[73] P. Cui, X. Wang, J. Pei, and W. Zhu, "A survey on network embedding," *IEEE Trans. Knowl. Data Eng.*, vol. 31, no. 5, pp. 833–852, May 2018.
[74] P. Goyal and E. Ferrara, "Graph embedding techniques, applications, and performance: A survey," *Knowl.-Based Syst.*, vol. 151, pp. 78–94, 2018.
[75] A. Grover and J. Leskovec, "node2vec: Scalable feature learning for networks," in *Proc. 22nd ACM SIGKDD Int. Conf. Knowl. Discov. Data Mining*, 2016, pp. 855–864.
[76] Y. Dong, N. V. Chawla, and A. Swami, "metapath2vec: Scalable representation learning for heterogeneous networks," in *Proc. 23rd ACM SIGKDD Int. Conf. Knowl. Discov. Data Mining*, 2017, pp. 135–144.
[77] A. Tsitsulin, D. Mottin, P. Karras, and E. Müller, "Verse: Versatile graph embeddings from similarity measures," in *Proc. World Wide Web Conf.*, 2018, pp. 539–548.
[78] S. Cao, W. Lu, and Q. Xu, "GraRep: Learning graph representations with global structural information," in *Proc. 24th ACM Int. Conf. Inf. Knowl. Manage.*, 2015, pp. 891–900.
[79] J. Qiu et al., "NetSMF: Large-scale network embedding as sparse matrix factorization," in *Proc. World Wide Web Conf.*, 2019, pp. 1509–1520.
[80] W. Hamilton, Z. Ying, and J. Leskovec, "Inductive representation learning on large graphs," in *Proc. Adv. Neural Inf. Process. Syst.*, 2017, pp. 1024–1034.
[81] M. Ding, J. Tang, and J. Zhang, "Semi-supervised learning on graphs with generative adversarial nets," in *Proc. 27th ACM Int. Conf. Inf. Knowl. Manage.*, 2018, pp. 913–922.
[82] P. Baldi and G. Pollastri, "The principled design of large-scale recursive neural network architectures-DAG-RNNs and the protein structure prediction problem," *J. Mach. Learn. Res.*, vol. 4, pp. 575–602, 2003.
[83] X.-D. Zhu, P. Sobhani, and H. Guo, "DAG-structured long short-term memory for semantic compositionality," in *Proc. Conf. North Amer. Chapter Assoc. Comput. Linguistics: Hum. Lang. Technol.*, 2016, pp. 917–926.
[84] Z. Liu et al., "Distance-aware DAG embedding for proximity search on heterogeneous graphs," in *Proc. 32nd AAAI Conf. Artif. Intell.*, 2018, pp. 2355–2362.

Yu Lu received the Ph.D. degree in computer engineering from the National University of Singapore, Singapore, in 2012.

He is currently an Associate Professor with the School of Educational Technology, Faculty of Education, Beijing Normal University (BNU), Beijing, China, where he is also the Director of the Artificial Intelligence Lab, Advanced Innovation Center for Future Education (AICFE). He has authored or coauthored more than 60 academic papers in the prestigious journals and conferences (e.g., IEEE TKDE, TLT, ICDM, AIED, and AAAI) and currently serves as the PC member for multiple international conferences (e.g., AAAI, AIED, and EMNLP). Before joining BNU, he was a Research Scientist and Principle Investigator with the Institute for Infocomm Research (I2R), A*STAR, Singapore. His current research interests mainly lie at the intersection field of artificial intelligence and education.

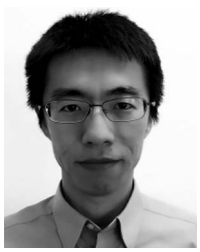

Penghe Chen received the Ph.D. degree in computer engineering from the National University of Singapore, Singapore, in 2015.

He was with the Advanced Digital Sciences Center, Singapore. He is currently the Principle Researcher with the Advanced Innovation Center for Future Education, Beijing Normal University, Beijing, China. His research interests include knowledge graph, educational data mining, and learning analytics.

Yang Pian received the master's degree major in computer science from the Hong Kong University of Science and Technology, Hong Kong, in 2017. She is currently working toward the Ph.D. degree in educational technology with Beijing Normal University, Beijing, China.

Her research interests include educational data mining, AI in education, and data visualization.

Vincent W. Zheng received the Ph.D. degree in computer science from the Hong Kong University of Science and Technology, Hong Kong, in 2011.

He is currently a Senior Research Scientist with Advanced Digital Sciences Center, Singapore, and a Research Affiliate with the University of Illinois at Urbana-Champaign, Champaign, IL, USA. His research interests include graph mining, information extraction, ubiquitous computing, and machine learning.

Authorized licensed use limited to: HUNAN UNIVERSITY. Downloaded on October 18,2022 at 08:41:05 UTC from IEEE Xplore. Restrictions apply.